CROW-00082

CROWN

2 BAND
10 TRANSISTOR
FM·AM
PORTABLE RADIO
model
TRF-1100

HOW TO USE TRF-1100

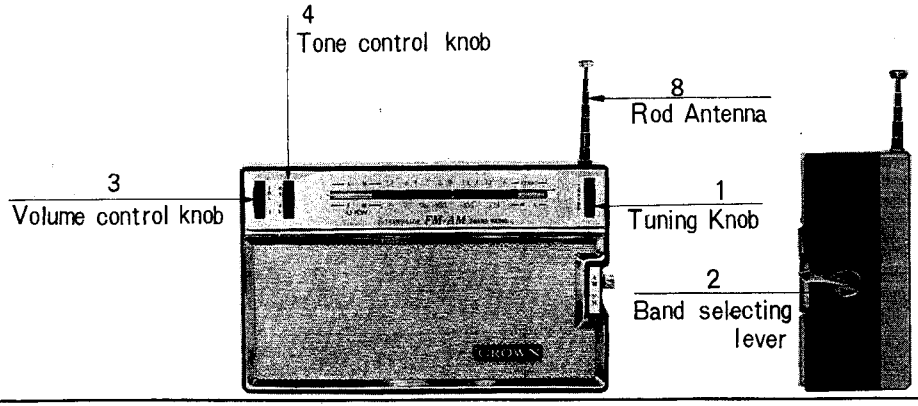

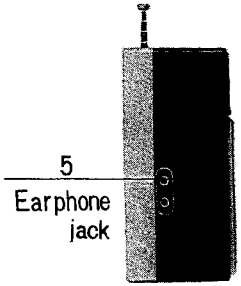

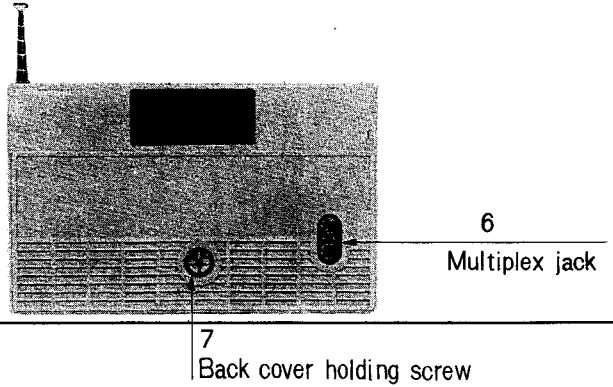

Operation:

1 Tuning knob:

Use this knob to select stations in all bands.

2 Band selecting lever:

Set this lever at the desired BAND mark (FM-AM).

3 Volume control knob:

Turning this knob clock-wise a slight "click" will be heard.

The set is now "on". To increase the volume keep turning the knob until the desired volume is reached.

4 Tone control knob:

Use this knob to control tone (High-Low)

5 Earphone jack:

Upper jack ····The speaker is cut out when an earphone is plugged into this jack.

Lower jack ····The speaker is not cut out when an earphone or an extension speaker is plugged into this jack.

Both jacks may be used together.

6 Multiplex jack:

Plug an extension speaker into this jack for listening to FM stereo broadcasting.

7 Back cover holding screw.

Turn this screw counterclockwise to open the cover.

8 Rod antenna:

Use this universal rod antenna at any desired length or angle when listening in FM.

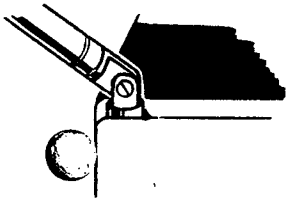

Replacement of batteries:

Insert six batteries in two rows with the tips (Positive Poles) facing the right side of the compartment as shown in the picture. The batteries can easily be taken out by pressing them towards the Negative Pole.

Caution:

Transistors are vulnerable to heat. Do not expose the radio to the sun nor place it near heaters of any kind.

If radio is not being used for an extended period of time, remove batteries.

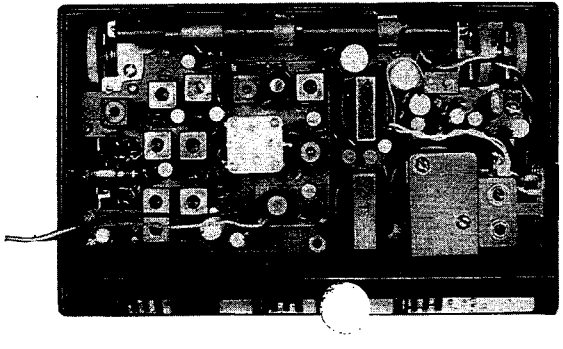

FM/AM

TRF-1100

FEATURE:

* Full rich tone with a large speaker.
* Multiplex extension speaker can be used.
* Rod antenna can be used at any desired length or angle when reception is weak.

SPECIFICATIONS

circuit	2 band 10 transistor	varistor	1
	4 diode super-heterodyne	output power	undistorted 220mW
freq. range	FM 88 ~ 108 MC		maximum 400mW
	AM 535 ~ 1605KC	speaker	3 ½"(9 cm) P.D. speaker
intermediate freq.	FM 10.7MC	earphone	magnetic earphone
	MW 455KC	antenna	7 section rod antenna
sensitivity	FM 55μv/m/50mw	dimensions	4¼" × 6⅛" × 1⅞"
	MW 550μv/m/10mw		(10.7 × 17.8 × 4.8 cm)
transistor	10	weight	650g (with batteries)
diode	4	battery	1.5V pen-light battery × 6 (9V)
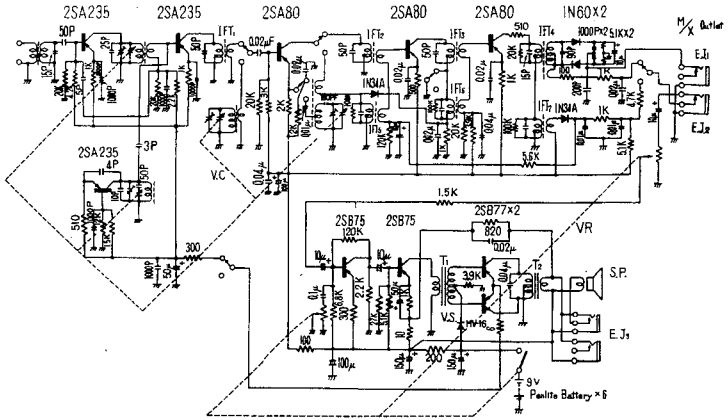
CIRCUIT